USER GUIDE
V.1.0.R7

PICTOR

Wrist joints rehabilitation device

USER GUIDE

V.1.0.R7

BASIC UDI-DI 5903918WDPIC-0001TT

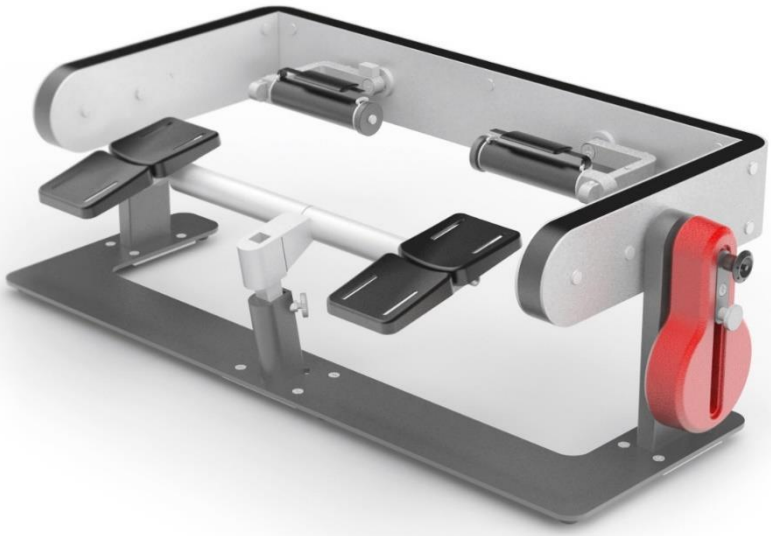

1. WSTĘP

Wishing you satisfaction of PICTOR usage, we thank you for your choice.

PICTOR device is a response for the patients who are suffering from the wrist and elbow dysfunctions. Due to its adaptavity it enables to perform three independent movements: flexion and extension, abduction and adduction of the wrist and rotation of the elbow. Construction of PICTOR device enables the complex rehabilitation of the wrist based on self-assisted, active and resistance exercises.

This manual provides all the needed information concerning PICTOR device proper functioning.

The manufacturer is entitled to change the content of the manual when it's needed. The updated version of the manual will be available to download from the manufacturer's website www.termamed.pl from the "Downloads" section.

Manufacturer:

Terma Sp. z o.o.
80-298 Gdansk
Czaple 100
Poland
T: +48 58 694 06 04
F: +48 58 695 05 06
email: termamed@termamed.pl
www.termamed.pl

Exclusive distributor:

MEDEN-INMED Sp.z o.o.
75-847 Koszalin
Wenedów 2
Poland
T: +48 94 347 10 40
F: +48 94 347 10 41
email: meden@meden.com.pl
www.meden.com.pl

Service:

MEDEN-INMED Sp.z o.o.
T: +48 94 344 90 48 / +48 600 693 741
F: +48 94 347 10 41
email: murbanowicz@meden.com.pl

1. EXPLANATIONS OF SYMBOLS

It is mandatory to read the safety statements before using the device. The safety statements are classified as follows:

⚠	Safety warnings and essential usage details.
⚠	Safety of exploitation warnings. Unless followed, may result in minor personal injury and/or product/property damage.
●	Mark of the active part of the device described on the illustrated scheme and explained in table.

2. DEVICE STRUCTURE

The structure of the device is explained on the model below.

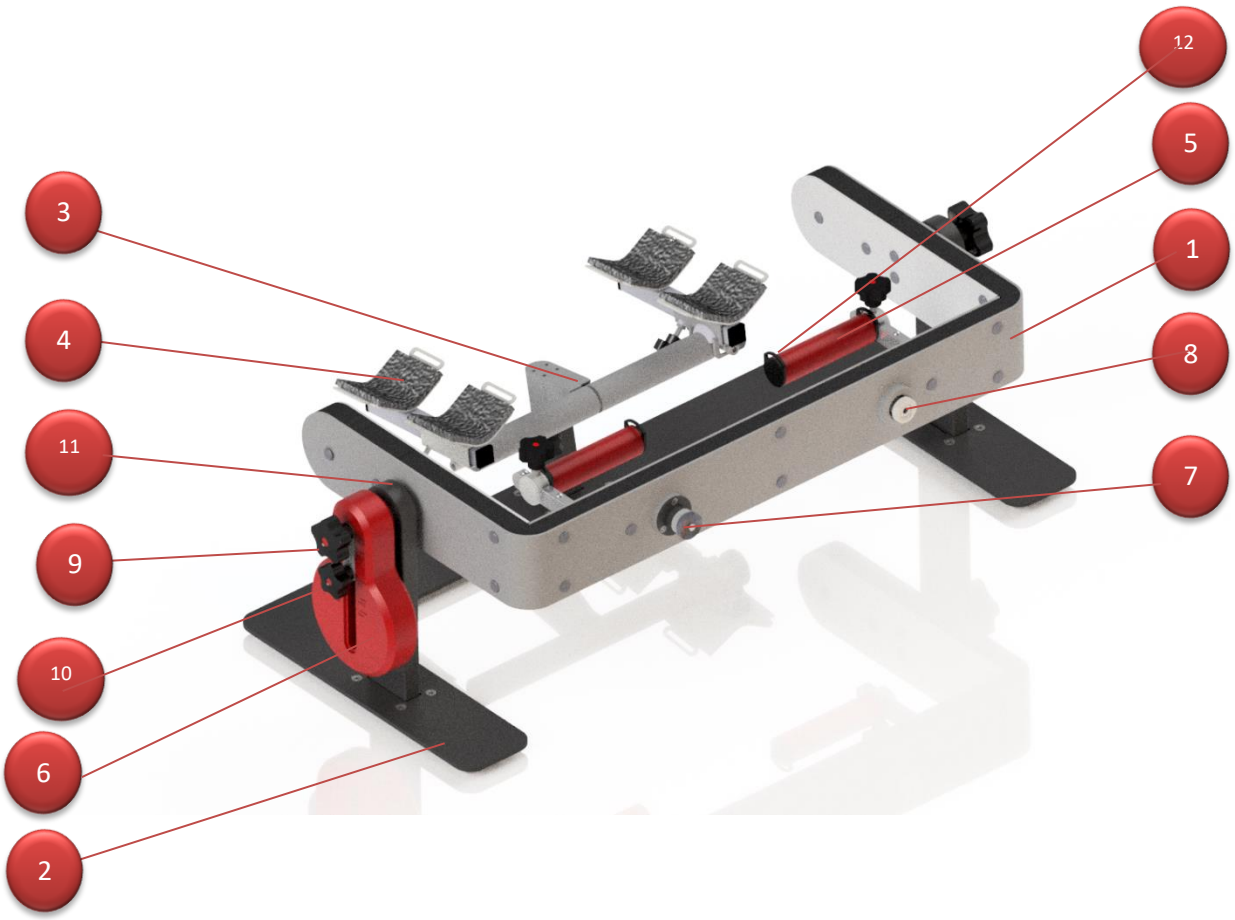

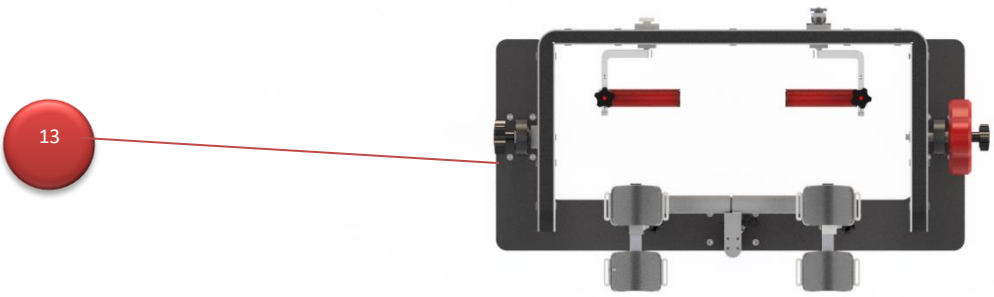

The list of components:

1	Horizontal frame	Adaptive, functional element which enables performance of all exercises.
2	Base frame	Base which enables to attach other components.
3	Forearm crane	Adaptive element (regulation of height and the inclination angle) that enables precise forearms placing in the device structure.
4	Forearm pads	Adaptive element that adjusts the extension of the forearm pads to set the upper limbs precisely in the device structure.
5	Handles	Ergonomic grip to perform therapeutic process.
6	Weight	Adaptive element that enables due to variable geometry to define proper weight for therapeutic process.
7	Positioning knob (1)	The knob that enables to block the abduction and adduction of the handle axis.
8	Socket (1)	An element that enables to attach the weight (6) to the horizontal frame (1) during rotation resistance exercises of the forearm.
9	Positioning knob	An element positioning the weight in one of two sockets.
10	Positioning knob (2)	An element that enables to adjust the weight through various positions of the weight.
11	Socket (2)	An element that enables to attach the weight (6) during flexion and extension resistance exercises as well as abduction and adduction of the wrists.
12	Positioning knob(3)	A knob that adjusts the position of the handle (5).
13	Positioning knob (4)	An element locking the position of the horizontal frame (1) in the defined place.

3. INDICATIONS

PICTOR device is dedicated for adults. It is dedicated for kinesiotherapy post traumatic injuries.

- Injuries to ligaments and cartilage,
- Muscle and ligament strains,
- Twists of the wrist joint,
- Dislocations in the area of wrist joint,
- Breaks of the wrist joint,
- Neurological problems causing upper limb disfunctions.

The device is dedicated to be used in rehabilitation facilities and at home on the basis of a loan from the facility. The condition for safe and effective use is the constant supervision of a physiotherapist over the course of exercises, ranges of motion and the applied resistance.

4. PROPONOWANE FORMY REALIZACJI TERAPII

Urządzenie jest dostarczane do klienta w formie nie wymagających żadnych czynności przystosowawczych urządzenie do rozpoczęcia eksploatacji.

Umożliwia realizację następujących ćwiczeń:

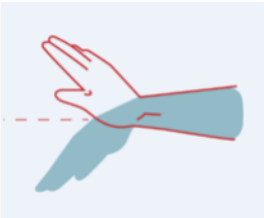

Flexion and extension of the wrist

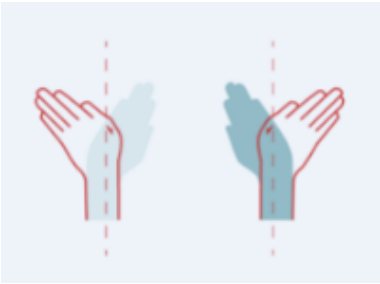

Wrist adduction and abduction

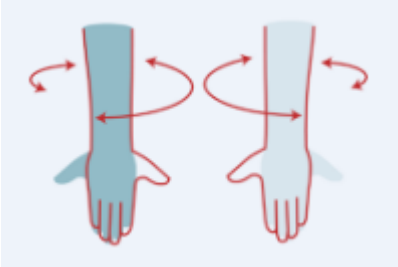

Forearm pronation and supination

Exercises can be performed in a following manner:

- Fexion and extension of the wrist – self assisted, active and resistance,
- Abduction and adduction of the wrist – active and resistance,
- Forearm pronation and supination – self assisted and resistance.

Ranges of motion:

- 90° wrist flexion and extension (self-assisted, active and resistance)
- 72° wrist adduction (self-assisted, active and resistance)
- 90° wrist abduction (self-assisted, active and resistance)
- 90° forear pronation and supination (self-assisted, active and resistance)

The device is delivered to the customer in a form that does not require any adaptation measures to start operation. Due to the diversification of exercises, the apparatus has the function of adapting to the individual anthropometric dimensions of the patient.

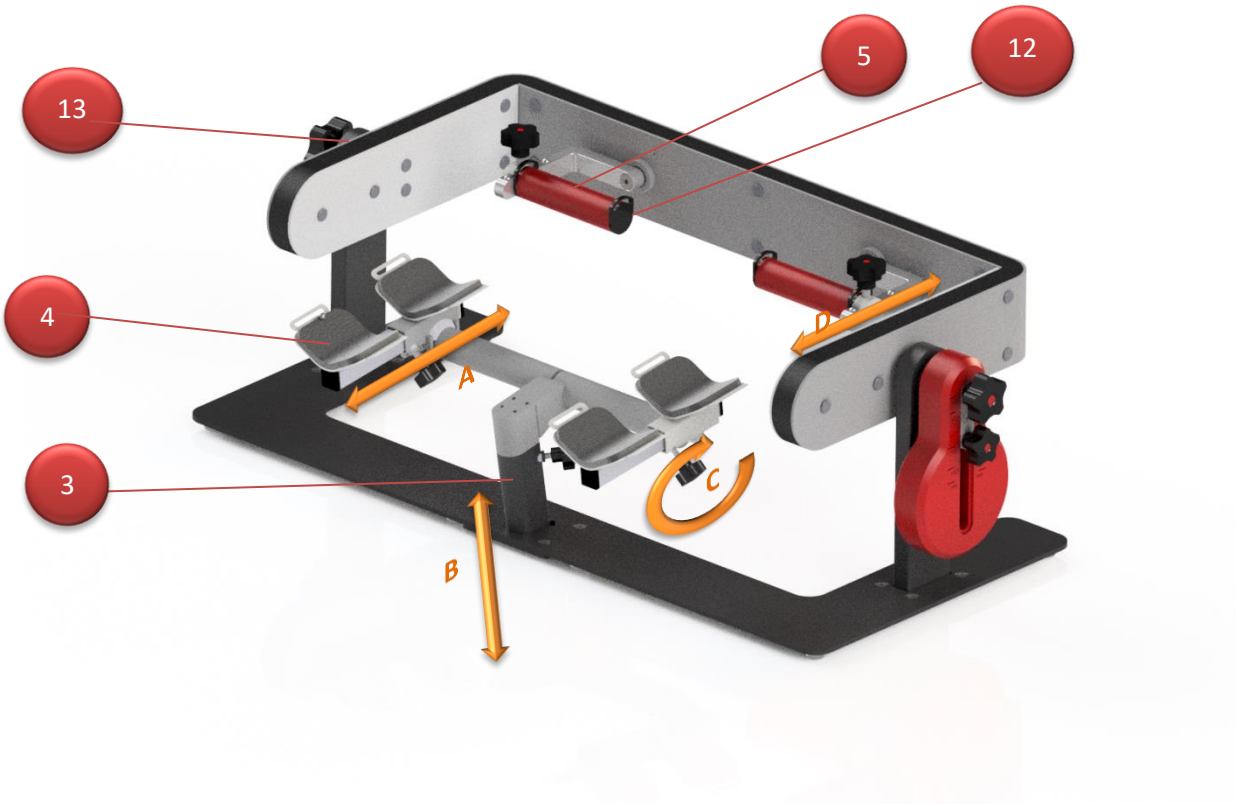

- The spacing of the pads to adjust them to the length of the forearm (A) is possible thanks to the knobs located under the pads (4)
- The height (B) is adjusted by setting the height of the forearm pad (3).
- Changing the angle of the position in relation to the ground (C) is done by releasing the knob under the right pad.
- Extend the handle (4), (5) to adjust the size using the positioning knob (12).

It is suggested to make settings to fine-tune the device with the positioning knob (13) closed. The device should be positioned in such a way as to ensure that the axis of rotation of the device coincides with the anatomical axes of rotation in the joints.

Flexion, extension, abduction and adduction of the wrist:

- Adjust the pads (4),
- Release the positioning knob (13).
- Lock the positioning knob (7).
- To perform the self-assisted exercises do not use the resistance (6).
- To perform the resistance exercises, adjust the weight (6) on the socket (11).

Setting the device to persorm abduction and addustion is the same as for the flexion and extension explained above. Only the setting of the handle is changed (5) from the horizontal into vertical setting. It is possible after releasing the positioning knob (7), placing the handle in the needed position and locking the positioning knob again (7).

During flexion, extension, abduction and adduction the weight (6) shouldn't be connected to with the socket (8)!

Forearm pronation and supination:

- Adjust the pads,
- Release the positioning knob (13).
- Lock the positioning knob (7).
- To perform the self-assisted exercises do not use the resistance (6).
- To perform the resistance exercises, adjust the weight (6) on the socket (8).

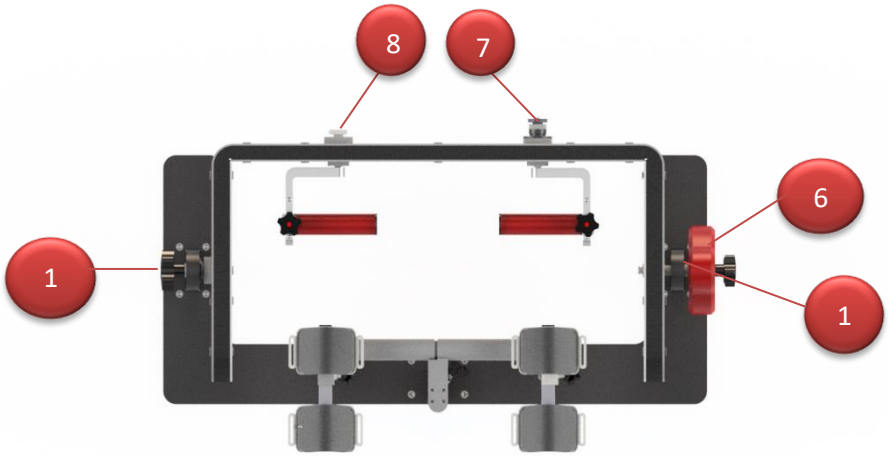

Adding the weight

The weight (6) is used to perform the resistance exercises. Depending on the connection of the weight with the socket, it generates a different moment of force. The weight can be connected in on of two sockets: (8) – ruchy pronation and supination; (11) – adduction, abduction, flexion and extension:

To disconnect/replace the weight:

- Release the knob (10)
- Open the knob (9) and disconnect the weight (6), holding it firmly from the underneath
- Place the weight in the socket (8) or (11) depending on the exercise.

The weight can be coonected at various angles – it enables to adjust different weights, according to the patient's need.

Do adjust the weight:

- Release the knob (10),
- Move or rotate the weight to adjust the proper resistance.

Moving the weight released in the knob (10), the moment of force changes enabling to adjust the resistance.

5. WARNINGS

To ensure the highest safety of user's health it is necessary to read and follow the warnings below.

Before usage it is necessary to read the user guide first and definitely follow the terms, advices and warnings.

User guide is also available at www.termamed.pl where tutorial videos are also uploaded.

The only entity allowed to service and technical reviews is a manufacturer TERMA Sp. z o.o. of a service pointed by a manufacturer. The manufacturer is not responsible for any improvement or repairs made by other parties.

In case of any incidents which causes damage on the patient's health, it must be reported immediately to the manufacturer. Additionaly, it's advised to fill in such case "Incident aplication form" and send it by post or e-mail to the manufacturer. The form is a part of a user guide available also at www.termamed.pl in the "Downloads" section.

6. CONTRAINDICATIONS AND RECOMMENDATIONS

In order to ensure the highest comfort and safety during PICTOR device exploitation, please mention the contraindications to the therapy listed below:

1. Changes in the skeletal system, such as: unfused bones, injuries which do not allow for the implementation of the training.
2. If the patient anthropometric conditions do not allow for adjustment of the structure of the device.

It is recommended to use sportswear made of cotton for full range of motion.

PICTOR Wrist rehabilitation device is a reusable device.

The elements of the device, with which the patient comes into contact, require disinfection each time after the end of the therapeutic session by each patient.

Cleaning the device should be performed with the use of soft, dry fabrics, or with the addition of clean water. For all products, it is forbidden to use abrasive materials that could damage the coating. Recommended disinfectants for delicate surfaces, containing alcohol.

.

7. WŁAŚCIWOŚCI TECHNICZNE

Manufacturer:

Terma Sp. z o.o.

Model:

PICTOR

Version:

V.1.0

Class:

Class I Rule I

Dimensions:

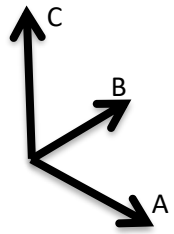

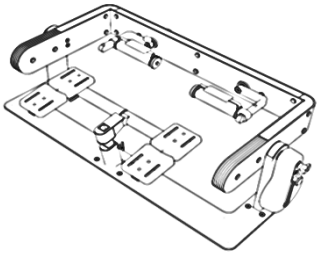

A = 620 mm

B = 240 mm

C = 360 mm

Ranges of motion:

Wrist flexion and extension: 90°

Wrist adduction: 72°

Wrist abduction: 90°

Forearm pronation and supination: 180°

Weight:

17 kg

8. WARRANTY

Terma Sp. z o.o. guarantees good condition and efficient operation of the device mentioned in the Warranty Card, hereinafter referred to as Product, according to the technical and exploitation details described in the user guide. Warranty confirms the responsibility of the entity who introduced the product to the market to free of charge removal of any faults of the product that was sold. The warranty does not limit or suspend buyer's rights resulting from nonconformity of the goods with the contract.

1. The warranty period starts on the day of receipt of the Product and is 24 months for the main structure of the device.
2. The free warranty repair shall be understood as the performance by the Guarantor during the warranty period of the specific activity appropriate for removing the defect covered by the warranty. This warranty covers Product defects caused by defective parts or defects in production. Warranty liability covers only defects caused by the underlying causes of the sale.
3. The condition for the Buyer to use the rights given by warranty is to present at the time of the service request a total of:

a. Deffective product,
b. A proof of purchase.

4. The warranty will be done by the service during 14 working days from the date of acceptance the product to be repaired or from delivering it to the manufacturer's service to the address:

Terma Sp. z o.o.
Czaple 100, 80-298 Gdańsk, Poland
58 694 06 04, serwis-medyczne@termagroup.pl

5. The scope of warranty service does not cover the installation, commission and maintenance activities which, in accordance with the user guide, is required to performed by the user of the Product on his own. Warranty repairs do not include periodic maintenance and product reviews, and in particular: cleaning, regulation, performance control, correction of operating errors or parameter programming, and other actions that the user is responsible for.

   The warranty excludes cases of random damage independent of operating conditions (for example: thefts, accidents, fires, floods) and mechanical damage caused by improper use.
6. The Buyer, by submitting the Product to the Service, and in particular by sending it to third parties, shall provide him with a secure package. Any damage or damage to the Product resulting from its improper packaging shall be covered by the Buyer. Along with the Product, the Buyer shall include the exact description of the defect that causes the need of repair. The person submitting the complaint should provide his / her personal details: name, address, telephone number.
7. Guarantor chooses the best way to remove the defect. The Guarantor undertakes to remove physical defects free of charge by repair or replacement of the Product free of defects. Regardless of how defects are removed, the warranty continues.
8. Any faulty Products or parts exchanged under the guarantee become the property of Terma Sp. o.o.
9. If only a part of the Product is defective and can be detached from the Product in accordance with the technical and operating conditions described in the user guide, the Buyer's right under these Warranty Terms shall be limited to the repair of the defective part of the Product only.
10. The Buyer has the right to exchange the Product for the new one, free from defects, if:
    a. During the warranty period referred to in Section 1, the Service will carry out five warranty repairs and the Product will still reveal defects that prevent it from being used for its intended purpose, or
    b. The service will confirm in writing that removal of the defect is impossible.
11. User loses warranty rights in case of:
    a. Statements of unauthorized alerts or corrections in the Guarantee Card made by unauthorized entities.

b. Statements made in the Product by unauthorized modifications or adjustments not expressly provided in the operating instructions.
c. Statements of attempted repairs and interventions by third parties.
d. Statements of use of parts and materials not recommended by the Manufacturer and the Guarantor.

12. The warranty does not support:

a. Damages caused by improper storage, transportation, failure to perform maintenance, periodic inspection.
b. Damages resulting from maintenance and repair work performed by the user in contravention of the user guide.
c. Damages caused by the user's fault or ignorance.
d. Product damages resulting from natural usage resulting from its use.
e. Damage caused by the user's fault or ignorance.
f. Damages caused by non-original spare parts or use of materials not intended for use with the Product.
g. Products whose Warranty Card or serial numbers have been altered, blurred or removed in any way.

13. Warranty does not cover parts and materials whose consumption is a natural consequence of work, and these are, in particular, consumable items that are clearly consumed during the operation of the Product. Warranty rights do not include the buyer's right to demand the return of the lost profits in connection with the failure and repair of the Product.

TERMA
SINCE 1990

INCIDENT APPLICATION FORM

In the event of an incident that results in damage to the equipment or injury to the patient, manufacturer must be immediately reported. After filling the "Incident application form," given below, it should be provided to the manufacturer by e-mail termamed@termamed.pl or posted and also to the service: murbanowicz@meden.com.pl.

Name of institution:

.....

Adress:

.....

Institution contact details:

.....

Contact details of the patient involved in the incident:

.....

Contact person name, surname, e-mail and phone number:

.....

Date of the incident:

.....

Date of the notification:

.....

Description of the incident:

.....
.....
.....
.....

Incident effects:

Additional informations: