LOW INCLUSIVE SANDBOX

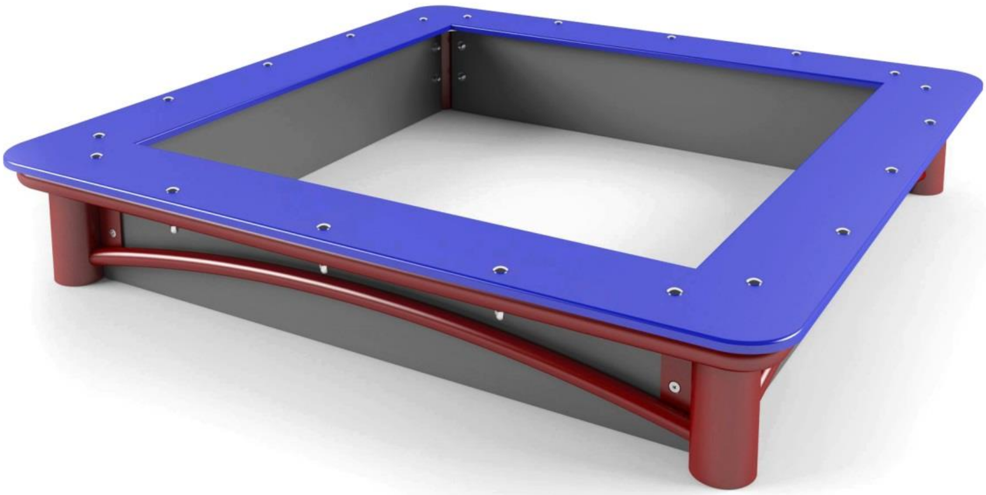

Inclusion • Fun • Rehabilitation

TERMA Sp. z o. o.
Czaple 100 | 80-298 Gdańsk |www.termagroup.pl | NIP (VAT No.): 583-10-18-844 | REGON register: 190558447 | BDO register: 000003524 | Sąd Rej. w Gdańsku, VIII Wydz. Gosp. | KRS nr 0000069067 | Equity capital: 2 360 500 PLN | Bank details: ING Bank Śląski S.A. 88 1050 1764 1000 0023 0692 5997

Product code: WDPIA03

Product designation:
Inclusive sandbox is dedicated to be installed on the playgrounds, parks and private gardens. The inclusion is achieved when the sandbox is installed together with the TERMA Elevated inclusion sandbox.

Materials:
Construction: black steel profiles with epoxy primer and powder coating
Side boards: HDPE 10 mm and 15 mm thick
Substructure: concrete minimum B-15 class

Dimensions:
External dimensions: 1410x1410x450 [mm]
Internal dimensions: 1050x1050x240 [mm]
Height from the ground level: 240 mm
Weight (without foundation): 67 [kg]
Thickness of the HDPE: 10 [mm] sides and 15 [mm] seat
External circuit of the legs cross-section: 90 [mm]

Additional information:
Free fall height: none
Dimensions of the safety area: 1500 mm from each outer edge of the device
Foundation depth: 340 [mm]
Functional area: 30,26 m^2

TRENCHLESS TECHNOLOGY ///// HEATING PRODUCTS ///// MEDICAL PRODUCTS ///// INDUSTRIAL SERVICE

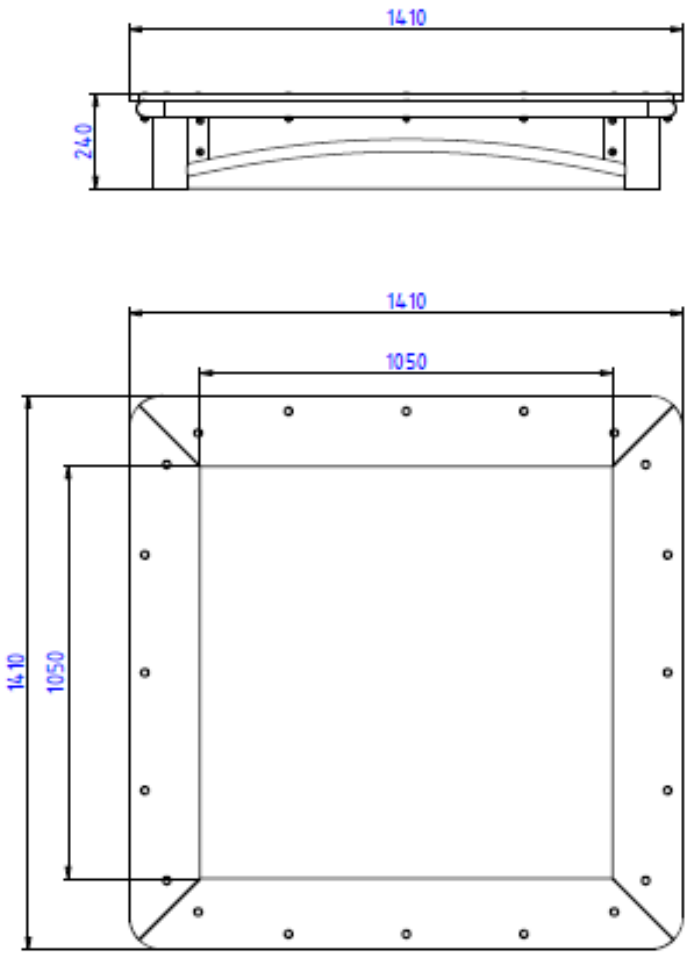

Fig. Dimensions of the low inclusive sandbox

Safety:

The Low inclusive sandbox complies with EN 1176 norm.

Installation:
Anchoring to the ground. Amortization layer is needed. Homogeneous surface is necessary.

Performance:

Low inclusive sandbox is not dedicated for wheelchair user. It can be accessed by users walking independently. It can be provided as a set with elevated integration sandbox.

Manufacturer:

TERMA Sp. z o.o.
Czaple 100, 80-298 Gdańsk
M: +48 / 609 900 451
produktymedyczne@termagroup.pl
www.termamed.pl
www.facebook.com/termamed